Wiring For MAF Conversion Using ARC2

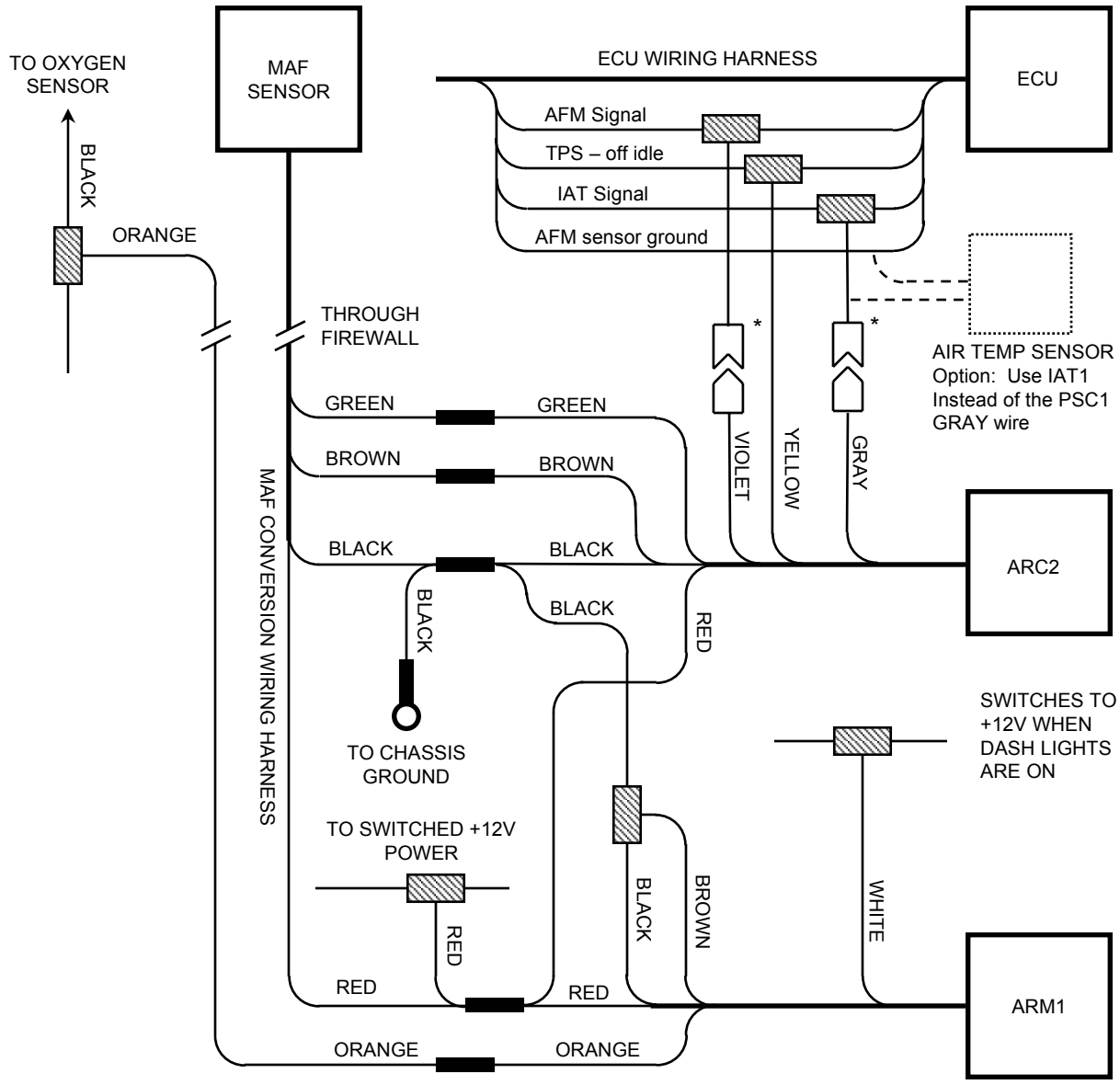

BUTT SPLICE CONNECTOR

RING CRIMP CONNECTOR

INSTANT SPLICE CONNECTOR

IN-LINE CONNECTOR

* NOTE: IN-LINE CONNECTORS MUST BE DISCONNECTED IF THE STOCK AIR FLOW METER IS RECONNECTED

2/11/04